M1:20

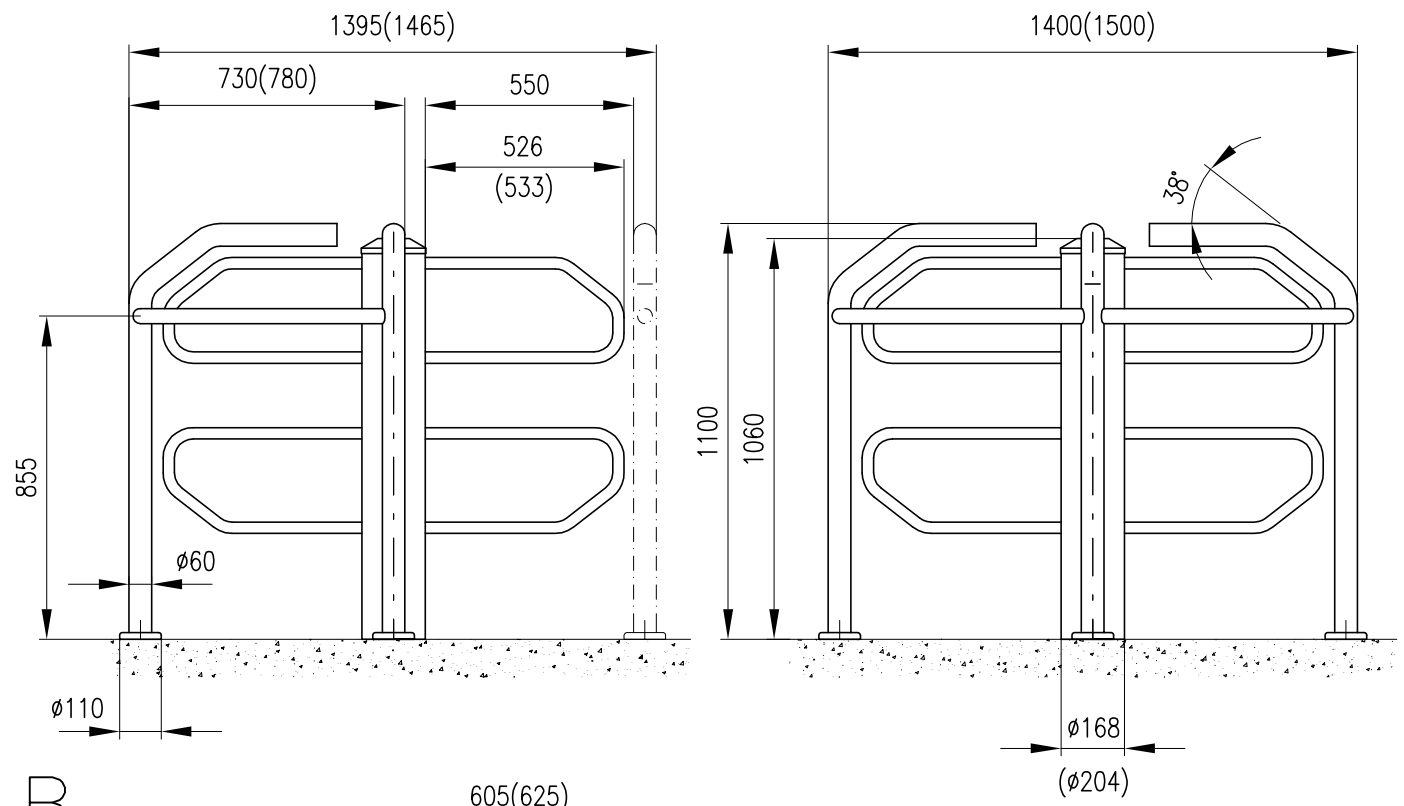

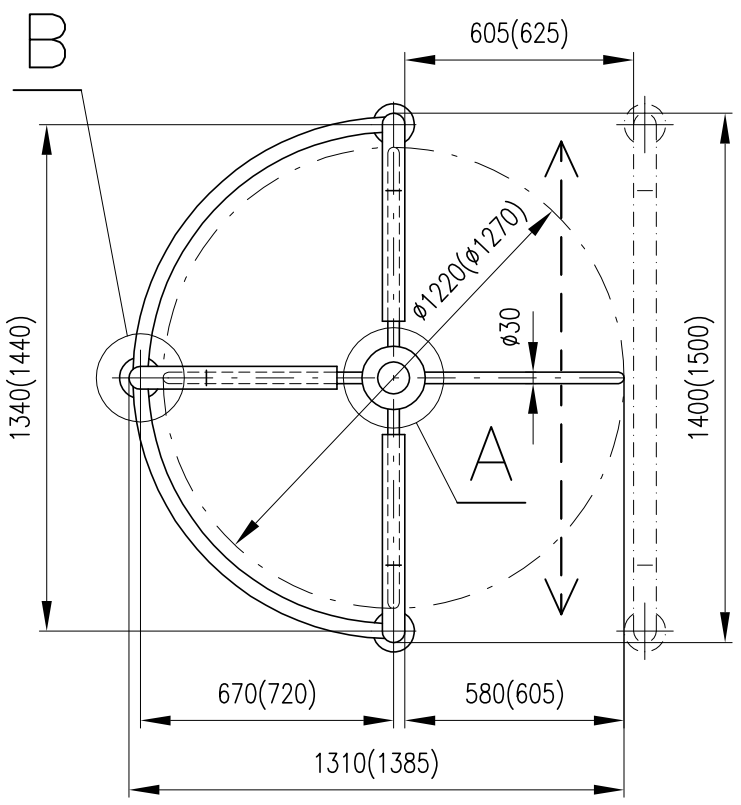

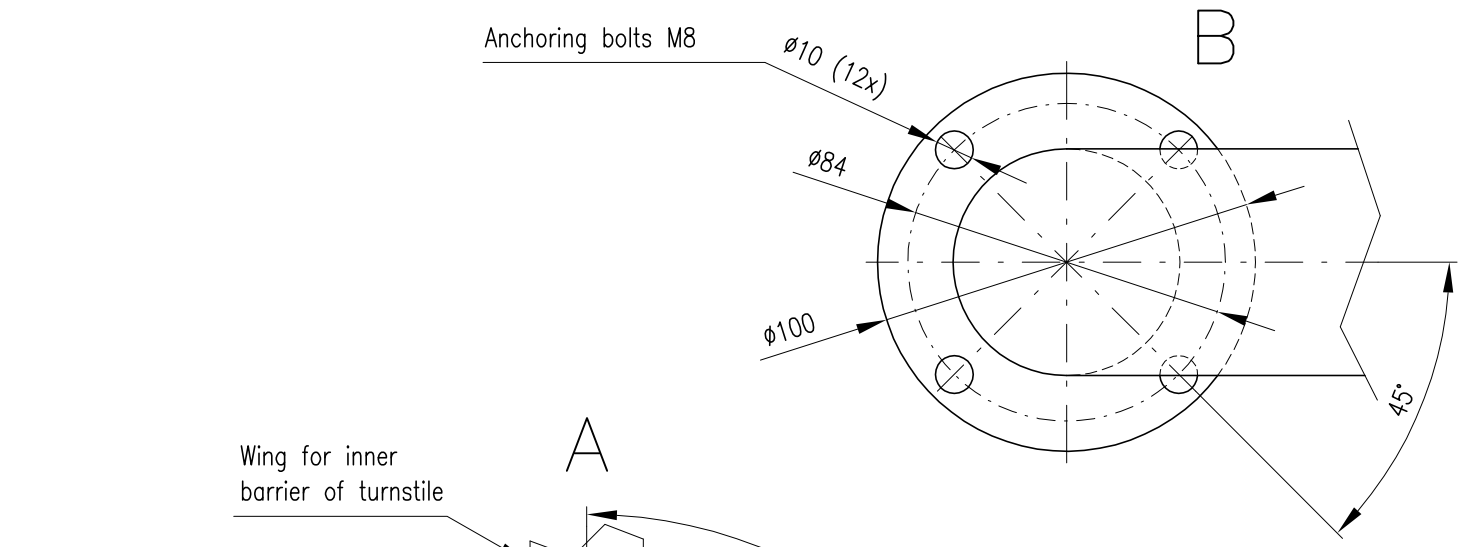

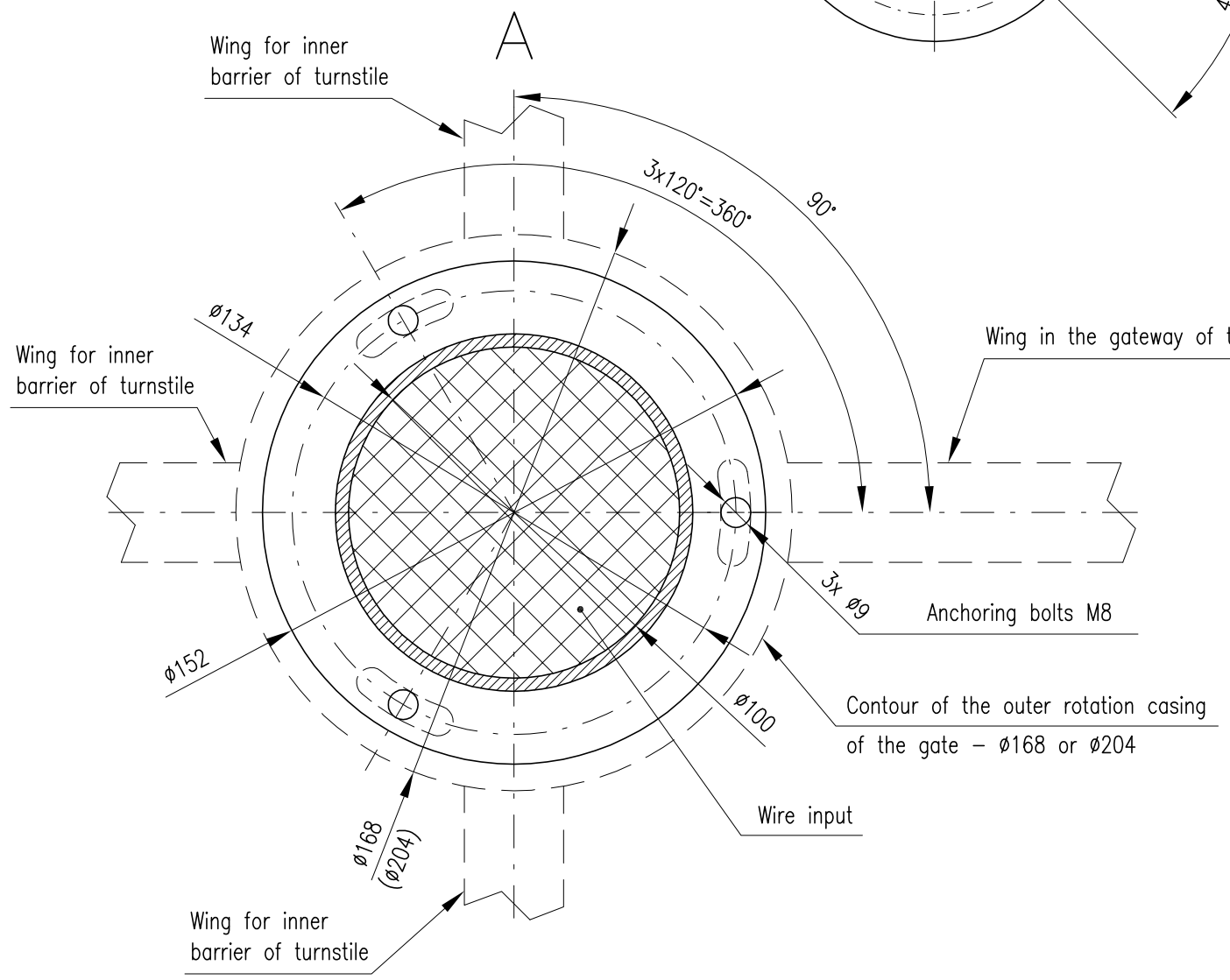

- Kable entry for RFID reader by any barrier
- Dimensions in the brackets are valid for design of turnstile with outer rotation casing of the gate ø204mm

Date	Drawed by	Material					
11/10/2010	Kašlík						

cominfo

Size	Project:	Order No.	Part/Parts
A3	Turnstile ROUND–J–90°–U		
Scale 1:2	Title: Anchoring dimensions	D.No. PK 101011–6	Version