LW:	550	650	700	750	800
A:	790	890	940	990	1040
B:	1030	1130	1180	1230	1280
C:	620	720	770	820	870
D:	50				100
W:	255	305	330	355	

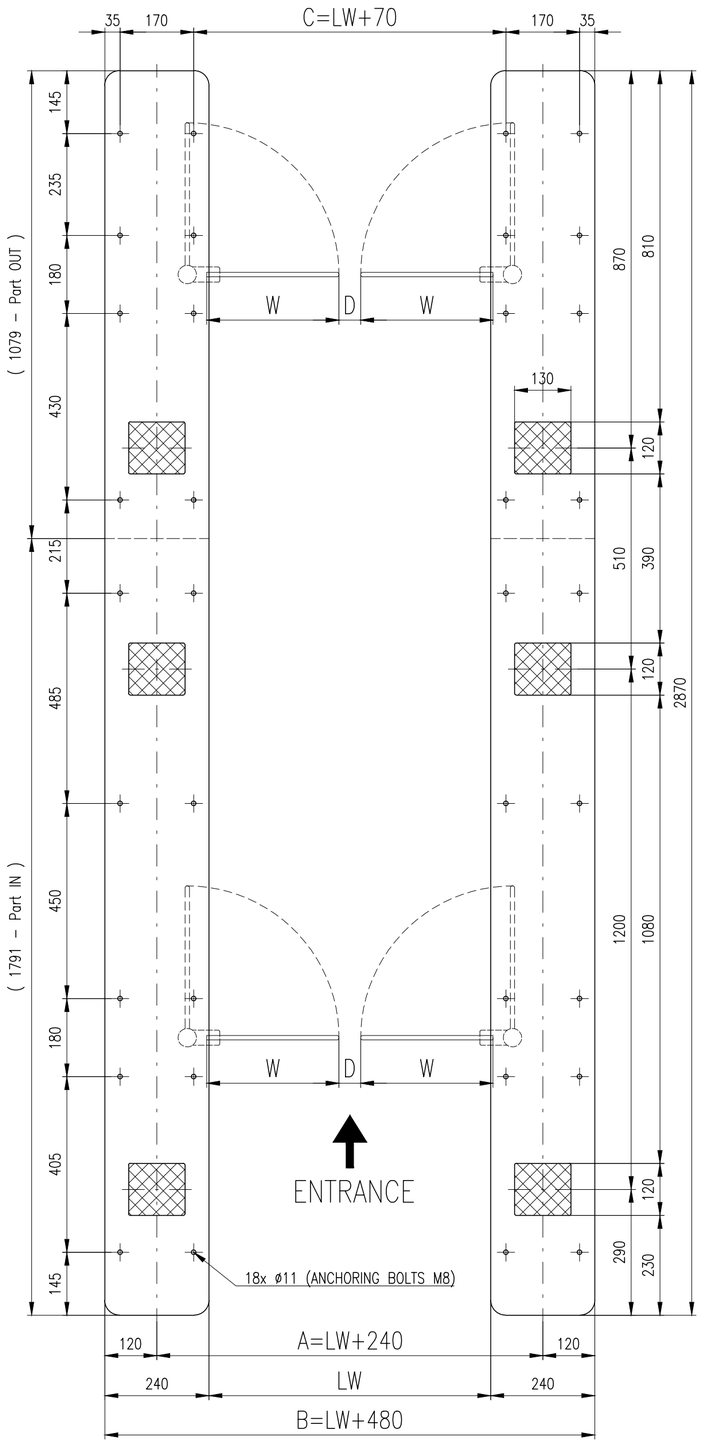

M 1:20

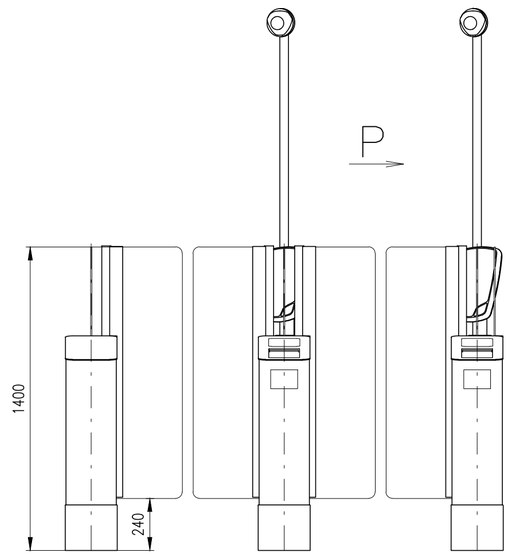

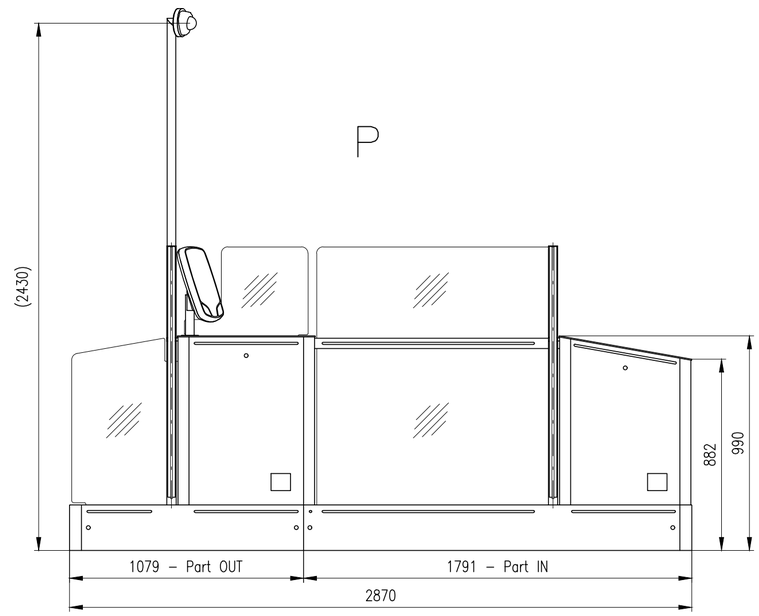

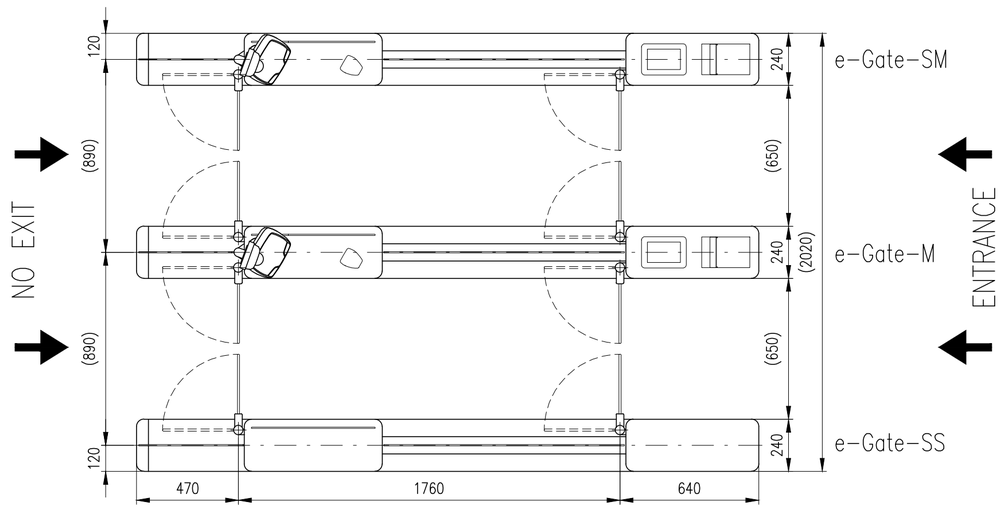

– WIRE INPUT (120 x 130)

	Date	Drawn by	Material	Order No.
	19.11.2021	Petr Kašlík		
Size A2	Project: e–Gate			
Scale 1:10	Title: Anchoring dimensions		D.No. PK 211119–1	Part/Parts

cominfo security first