	LW:	550	650	750	850	920	950	1050		
A	One wing	790	X	X	X	X	X	X		
	Two wings	760	860	980	1080	1170	1200	1320		

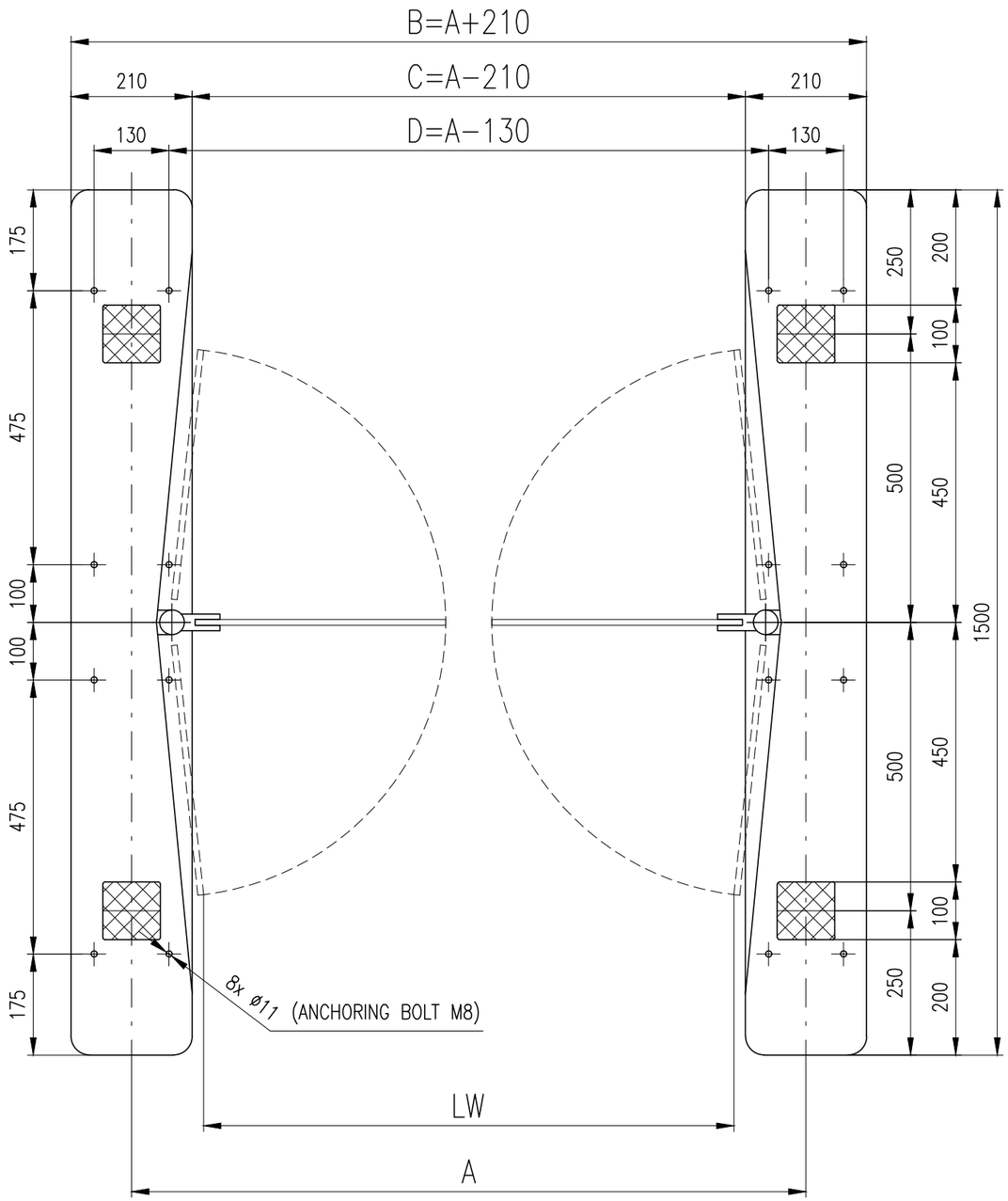

M 1:20

One wing variant

Two wings variant

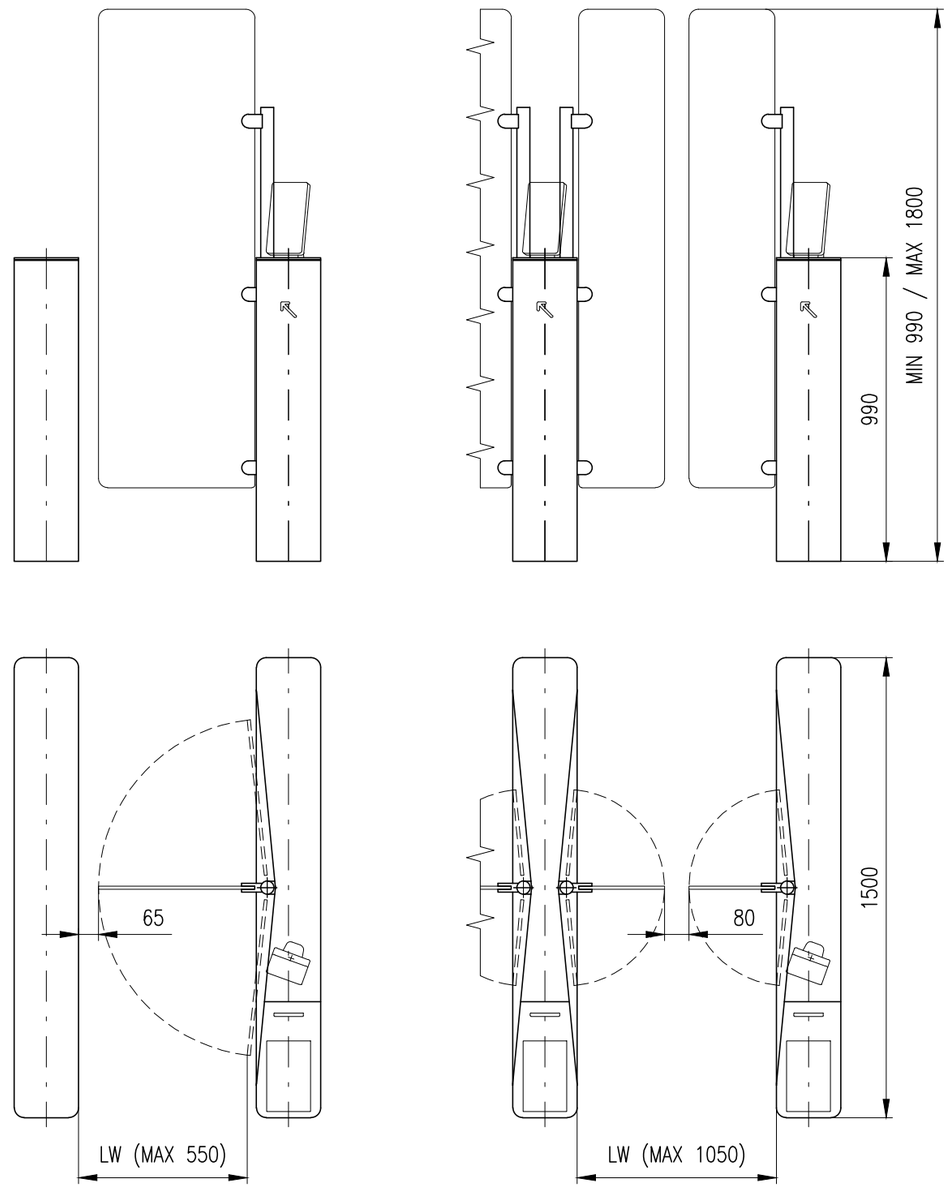

– WIRE INPUT (100 x 100)

	Date	Drawn by	Material	Order No.
	20.08.2020	Petr Kašlík		
Size A3	Project: EasyGate−SBG			
Scale 1:10	Title: Anchoring dimensions		D.No. PK 200820−1	Part/Parts

cominfo security first